UK Telephone Extension Wiring

This article explains how to wire a UK telephone extension. You are allowed to install extension wiring so long as the connection to the master socket is via a plug, or in the case of the master socket with a detachable lower half, via the connectors on that section. If you decide to connect directly to the master socket or install/replace a master socket you should b aware that you are in breach of your licence to use the phone service and your service provider may charge if they have to come to rectify a fault caused by your efforts (it is rare for them so to do unless you have been really ham fisted).

NEVER connect un-approved devices which take power from the mains to the telephone system. Even if you survive the mains on the cabling the poor wireman sitting in a muddy hole some way away trying to find a fault may not.

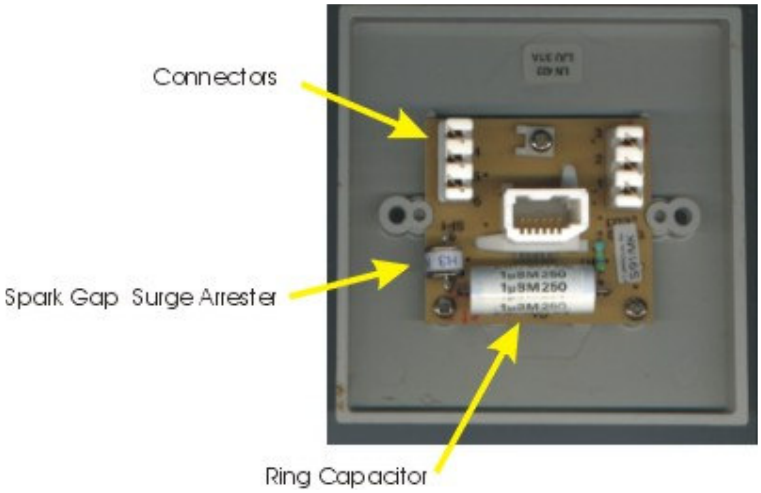

Master S

This is wh looks like. at the poin yours begi

Master so used for e

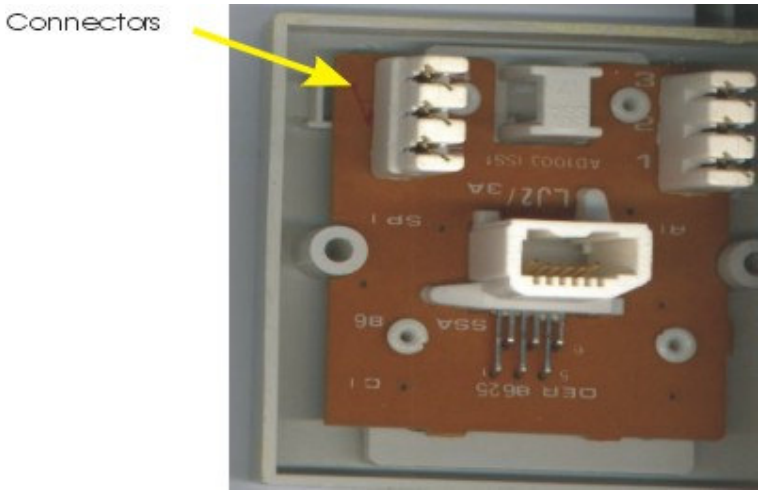

Extensio

All extensi absence o arrrester.

The conne displacem (especially screw term

Fixed Upper

This is the BT many installa

section

Austin Taylor
Internally it is
above but the
cover.

User removable lower
section

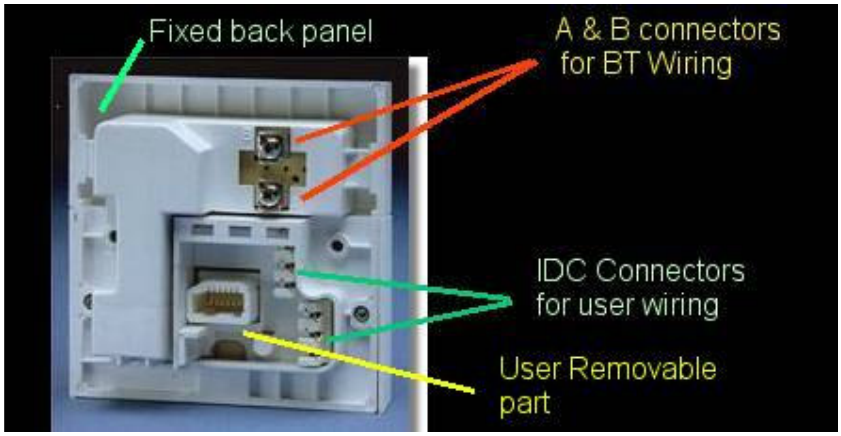

The Wiring

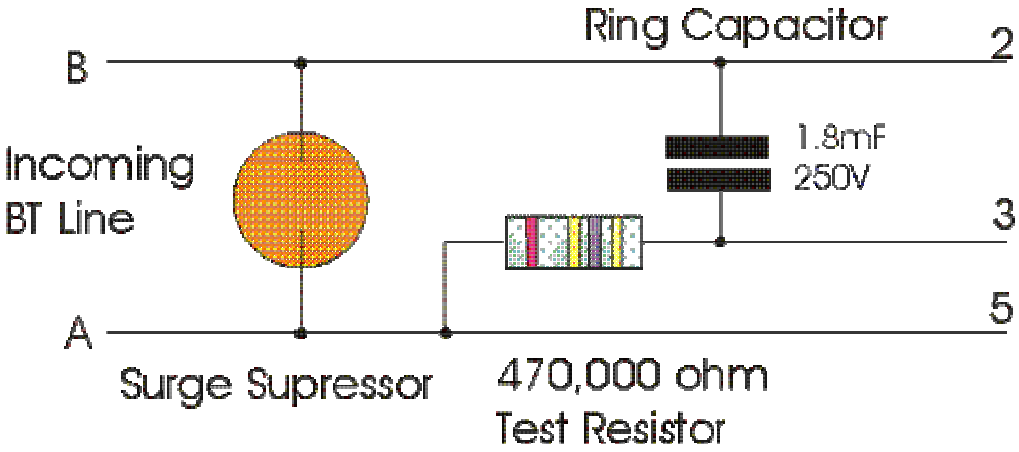

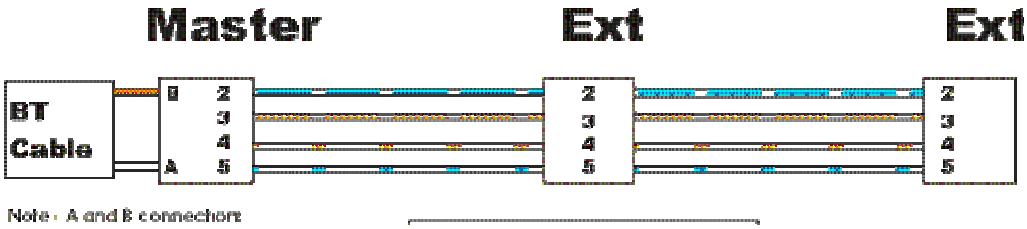

The BT Drop Cable (The cable coming from the outside world)

This often has Orange, White, Green and Black wires. Usually (but not always) Orange and White are the active pair and go to connections 2 and 5. In some master boxes (such as the type with a removable front section) they go to two connectors marked A and B.

Which way around they are connected usually doesn't matter but as Rick Hughes kindly pointed out some modems (especially older USA sourced ones) and some answering machines **are** fussy about polarity, so it's wise if possible to check the voltage on the line and connect -48V to the B leg (J2) and 0V to the A leg (J5).

If you have underground wiring with a small grey connection box by the door the internal cabling will usually be the same type and colour as the extension cabling.

Internal Cabling

Conn No.	Usual Cable Colour	Carries
1	N/A	No connection
2	Blue with White Bands	Speech and Ringing
3	Orange with White Bands	Ringing
4	White with Orange Bands	Not used but usually connected for neatness
5	White with Blue Bands	Speech and Ringing

6	N/A	No connection

An Important Note on Colour Codes

The colour code shown above is the one which would normally be used by BT. <u>HOWEVER</u> it isn't always adhered to, especially if internal wiring in a new house has been installed by an electrician or it's been done or modified by previous occupants.

You should never rely solely upon the colour code - always check both ends of the cable.

The Nice Thing About Standards Is That There Are So M

Just when you thought you understood it all, a brief word on plugs. The standard plugs encountered are the small RJ11 found on line cords at the telephone or modem end and the BT431A plug at the socket end. On RJ11 it is usual for the centre two pins to carry the signal, c BT431A it is the outer two.

By a masterpiece of technical superiority between them the BSI and BT managed to number th 431A plug in the British Standard as a mirror image of the socket, so when inserted pin 1 on th plug goes to pin 6 on the socket, pin 2 to pin 5 and so on.

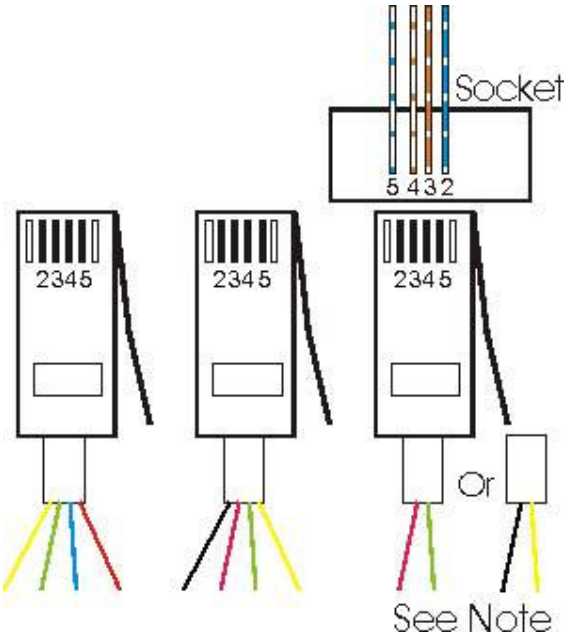

As the pin numbering isn't shown on the plug you might ask why I'm confusing the issue. Simply, many packets of plugs in the DIY sheds come with a little diagram on the back which often follows the BS numbering. If you do the logical thing and put a plug on assuming the

numbers are as on the socket the phone may not ring (and, as Adrian Graham who asked for this section to be included found out, without knowing the numbering is askew much pulling of hair, weeping and gnashing of teeth can occur as you try to find the fault).

Looking at the plug with the contacts uppermost the BT numbering is shown above with some common colour codes. That on the left is the older BT colour code, that in the centre is the one more commonly seen now, and that on the right is often found on modems, imported phones and Sky/On digital boxes with only two connectors.

A simple way of remembering the correct orientation for the BT plugs if you like mnemonics is **R**ing on the **R** ight. When you are holding the plug as shown in the diagram with the latch on the **right** the ring terminal (4 on the plug, 3 on the socket) is always just **right** of centre.

Note

Note that with the two rightmost 2 wire examples in the diagram going from RJ11 to BT will involve the colour code going "wrong" at one end or the other unless a junction box or joint is used. If the lead has a BT adapter at one end the colour swap is usually made there, USR tended to swap it in the RJ11 plug, others do their own thing. NORMALLY the center two pins on the RJ11 are connected to the outer two (2 and 5) at the BT end. No matter what coloured wire is used the two wires always go to pins 2 and 5 at the BT end however it isn't safe to assume they ALWAYS go to the center two at the RJ11 end.

This page was getting rather large so he sections on foreign phones and modems and Installation and Fault Finding have been moved to their own pages, please click on the links to go to them.

If you want to find an encyclopaedic site with information on almost every BT phone ev material then have a look at http://web.ukonline.co.uk/fres